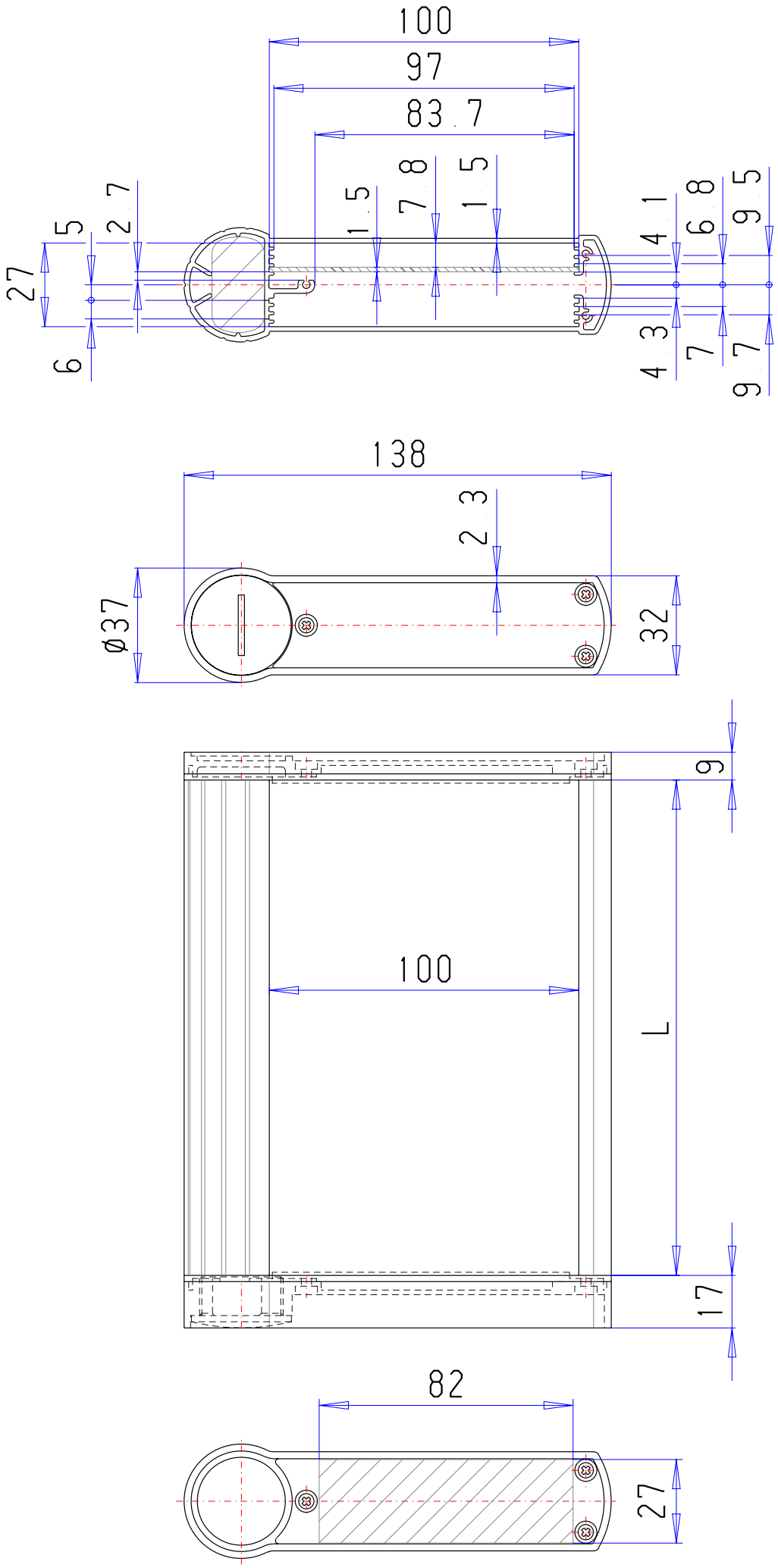
100
97
83.7
27
5
2.7
6
1.5
7.8
1.5
4.1
6.8
9.5
4.3
7
9.7
138
2.3
Ø37
32
9
100
L
17
82
27